RAIM Server 5.0
HL7 Conformance Statement

Centre Imatge Mèdica Digital
UDIAT Centre Diagnòstic S.A.
Corporació Sanitària Parc Taulí
Parc Taulí s/n
08208 Sabadell
SPAIN

Tel.: (+34) 93.717.11.54 (ext. 26100, 26102 i 26103)
Fax: (+34) 93.723.61.87
e-mail: cimd@cspt.es

Contents

1 General..... 2
1.1Application Data Flow Diagram..... 2
1.2Sequencing of real-world activities..... 3
2 Message specifications..... 3
2.1Code Tables..... 3
2.1.1Code table notes..... 3
2.2Message types / events supported..... 3
2.3Segments supported..... 3
2.3.1MSH Message Header..... 3
2.3.2EVN Event Type..... 4
2.3.3PID Patient Identification Segment..... 4
2.3.4ORC Common Order Segment..... 4
2.3.5PV1 Patient Visit Segment..... 5
2.3.6OBR Observation Request Segment..... 5
2.3.7OBX Observation/Result Segment..... 6
3 Extended Character Set Support..... 6

1General

RAIMServer HL7 Service receives incoming messages from external sources as HIS and RIS which are used to reconcile modality derived data stored in Image Manager database. It also emits HL7 messages to external nodes as HIS and RIS.

RAIMServer HL7 Service may use http communication protocol or file system, depending on configuration.

1.1 Application Data Flow Diagram

The RAIMServer HL7 Service operates as a Windows service, which activates automatically when the operative system starts. There is no user interface. Any settings shall be performed by UDIAT staff.

1.2 Sequencing of real-world activities

- Procedure Scheduled: The HIS/RIS uses message ORM HL7 to notify that a procedure has been scheduled.
- Procedure Updated: The HIS/RIS uses HL7 message ORM to notify that changes to procedure information took place.
- Merge Patient: The HIS/RIS sends HL7 message ADT^A40 when two patients records are found to identify the same patient and are merged.
- Patient Information Update: The HIS/RIS sends HL7 message ADT^A08 to notify changes to patient demographics information.

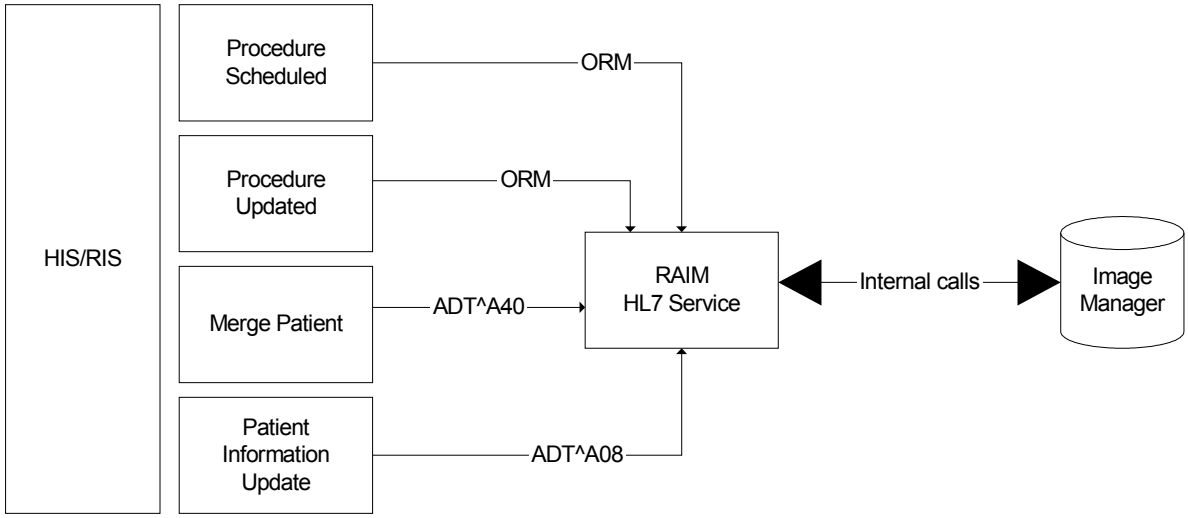

2Message specifications

2.1 Message types / events supported

```
ADT_A08 Update patient demographics
ADT_A40 Merge Patient - Internal ID
ORM_O01 Order message
```

2.2 Segments supported

Items required in every message are to be defined in every implementation project document.

```
MSH Message Header
EVN Event Type
PID Patient Identification Segment
ORC Common Order Segment
PV1 Patient Visit Segment
OBR Observation Request Segment
OBX Observation/Result Segment
MRG Merge Information
```

2.2.1 MSH Message Header

MSH	1	1	ST	R		00001	Field Separator
MSH	2	4	ST	R		00002	Encoding Characters
MSH	3	180	HD	R		00003	Sending Application
MSH	4	180	HD	R		00004	Sending Facility
MSH	5	180	HD	R		00005	Receiving Application
MSH	6	180	HD	R		00006	Receiving Facility
MSH	7	26	TS	O		00007	Date/Time Of Message
MSH	8	40	ST	O		00008	Security
MSH	9	7	CM	R		00009	Message Type
MSH	10	20	ST	R		00010	Message Control ID
MSH	11	3	PT	R		00011	Processing ID
MSH	12	60	VID	R	0104	00012	Version ID
MSH	13	15	NM	O		00013	Sequence Number
MSH	14	180	ST	O		00014	Continuation Pointer
MSH	15	2	ID	O	0155	00015	Accept Acknowledgment Type
MSH	16	2	ID	O	0155	00016	Application Acknowledgment Type
MSH	17	2	ID	O		00017	Country Code
MSH	18	6	ID	C	0211	00692	Character Set
MSH	19	60	CE	O		00693	Principal Language Of Message

2.2.2 EVN Event Type

EVN	1	3	ID	O	0003	00099	Event Type Code
EVN	2	26	TS	R		00100	Recorded Date/Time
EVN	3	26	TS	O		00101	Date/Time Planned Event
EVN	4	3	IS	O	0062	00102	Event Reason Code
EVN	5	60	XCN	O	0188	00103	Operator ID
EVN	6	26	TS	R2		01278	Event Occurred

2.2.3 PID Patient Identification Segment

PID	4	20	CX	O		00107	Alternate Patient ID
PID	5	48	XPN	R		00108	Patient Name
PID	6	48	XPN	O		00109	MotherÆs Maiden Name
PID	7	26	TS	R2		00110	Date/Time of Birth
PID	8	1	IS	R	0001	00111	Sex
PID	9	48	XPN	O		00112	Patient Alias
PID	10	80	CE	R2	0005	00113	Race
PID	11	106	XAD	R2		00114	Patient Address
PID	12	4	IS	O		00115	County Code
PID	13	40	XTN	O		00116	Phone Number - Home
PID	14	40	XTN	O		00117	Phone Number - Business
PID	15	60	CE	O	0296	00118	Primary Language
PID	16	1	IS	O	0002	00119	Marital Status
PID	17	80	CE	O	0006	00120	Religion
PID	18	20	CX	C		00121	Patient Account Number (see note)
PID	19	16	ST	O		00122	SSN Number û Patient
PID	20	25	DLN	O		00123	Driver's License Number - Patient
PID	21	20	CX	O		00124	Mother's Identifier
PID	22	80	CE	O	0189	00125	Ethnic Group
PID	23	60	ST	O		00126	Birth Place
PID	24	1	ID	O	0136	00127	Multiple Birth Indicator
PID	25	2	NM	O		00128	Birth Order
PID	26	80	CE	O	0171	00129	Citizenship
PID	27	60	CE	O	0172	00130	Veterans Military Status
PID	28	80	CE	O		00739	Nationality
PID	29	26	TS	O		00740	Patient Death Date and Time
PID	30	1	ID	O	0136	00741	Patient Death Indicator

2.2.4 ORC Common Order Segment

ORC	1	2	ID	R	0119	00215	Order Control
ORC	2	22	EI	R		00216	Placer Order Number
ORC	3	22	EI	O		00217	Filler Order Number
ORC	4	22	EI	C		00218	Placer Group Number
ORC	5	2	ID	O	0038	00219	Order Status
ORC	6	1	ID	O	0121	00220	Response Flag
ORC	7	200	TQ	R		00221	Quantity/Timing
ORC	8	200	CM	C		00222	Parent
ORC	9	26	TS	R		00223	Date/Time of Transaction
ORC	10	120	XCN	R2		00224	Entered By
ORC	11	120	XCN	O		00225	Verified By
ORC	12	120	XCN	R		00226	Ordering Provider
ORC	13	80	PL	O		00227	EntererÆs Location
ORC	14	40	XTN	R2		00228	Call Back Phone Number
ORC	15	26	TS	O		00229	Order Effective Date/Time
ORC	16	200	CE	O		00230	Order Control Code Reason
ORC	17	60	CE	R		00231	Entering Organization
ORC	18	60	CE	O		00232	Entering Device
ORC	19	120	XCN	O		00233	Action By

2.2.5 PV1 Patient Visit Segment

PV1	25	8	DT	O		00155	Contract Effective Date
PV1	26	12	NM	O		00156	Contract Amount
PV1	27	3	NM	O		00157	Contract Period
PV1	28	2	IS	O	0073	00158	Interest Code
PV1	29	1	IS	O	0110	00159	Transfer to Bad Debt Code
PV1	30	8	DT	O		00160	Transfer to Bad Debt Date
PV1	31	10	IS	O	0021	00161	Bad Debt Agency Code
PV1	32	12	NM	O		00162	Bad Debt Transfer Amount
PV1	33	12	NM	O		00163	Bad Debt Recovery Amount
PV1	34	1	IS	O	0111	00164	Delete Account Indicator
PV1	35	8	DT	O		00165	Delete Account Date
PV1	36	3	IS	O	0112	00166	Discharge Disposition
PV1	37	25	CM	O	0113	00167	Discharged to Location
PV1	38	80	CE	O	0114	00168	Diet Type
PV1	39	2	IS	O	0115	00169	Servicing Facility
PV1	40	1	IS	O	0116	00170	Bed Status
PV1	41	2	IS	O	0117	00171	Account Status
PV1	42	80	PL	O		00172	Pending Location
PV1	43	80	PL	O		00173	Prior Temporary Location
PV1	44	26	TS	O		00174	Admit Date/Time
PV1	45	26	TS	O		00175	Discharge Date/Time
PV1	46	12	NM	O		00176	Current Patient Balance
PV1	47	12	NM	O		00177	Total Charges
PV1	48	12	NM	O		00178	Total Adjustments
PV1	49	12	NM	O		00179	Total Payments
PV1	50	20	CX	O	0192	00180	Alternate Visit ID
PV1	51	1	IS	C	0326	01226	Visit Indicator
PV1	52	60	XCN	O	0010	01224	Other Healthcare Provider

2.2.6 OBR Observation Request Segment

OBR	1	4	SI	O		00237	Set ID - OBR
OBR	2	75	EI	R		00216	Placer Order Number
OBR	3	75	EI	O		00217	Filler Order Number
OBR	4	200	CE	R		00238	Universal Service ID
OBR	5	2	ID	O		00239	Priority
OBR	6	26	TS	O		00240	Requested Date/time
OBR	7	26	TS	O		00241	Observation Date/Time
OBR	8	26	TS	O		00242	Observation End Date/Time
OBR	9	20	CQ	O		00243	Collection Volume
OBR	10	60	XCN	O		00244	Collector Identifier
OBR	11	1	ID	O	0065	00245	Specimen Action Code
OBR	12	60	CE	R2		00246	Danger Code
OBR	13	300	ST	C		00247	Relevant Clinical Info.
OBR	14	26	TS	O		00248	Specimen Received Date/Time
OBR	15	300	CM	C	0070	00249	Specimen Source
OBR	16	80	XCN	R		00226	Ordering Provider
OBR	17	40	XTN	O		00250	Order Callback Phone Number
OBR	18	60	ST	O		00251	Placer field 1
OBR	19	60	ST	O		00252	Placer field 2
OBR	20	60	ST	O		00253	Filler Field 1
OBR	21	60	ST	O		00254	Filler Field 2
OBR	22	26	TS	O		00255	Results Rpt/Status Chng - Date/Time
OBR	23	40	CM	O		00256	Charge to Practice
OBR	24	10	ID	O	0074	00257	Diagnostic Serv Sect ID

OBR	25	1	ID	O	0123	00258	Result Status
OBR	26	400	CM	O		00259	Parent Result
OBR	27	200	TQ	R		00221	Quantity/Timing
OBR	28	150	XCN	O		00260	Result Copies To
OBR	29	150	CM	C		00261	Parent
OBR	30	20	ID	R2	0124	00262	Transportation Mode
OBR	31	300	CE	R2		00263	Reason for Study
OBR	32	200	CM	O		00264	Principal Result Interpreter
OBR	33	200	CM	O		00265	Assistant Result Interpreter
OBR	34	200	CM	O		00266	Technician
OBR	35	200	CM	O		00267	Transcriptionist
OBR	36	26	TS	O		00268	Scheduled Date/Time
OBR	37	4	NM	O		01028	Number of Sample Containers
OBR	38	60	CE	O		01029	Transport Logistics of Collected Sample
OBR	39	200	CE	O		01030	CollectorÆs Comment
OBR	40	60	CE	O		01031	Transport Arrangement Responsibility
OBR	41	30	XCN	R2		00224	Entered By
OBR	42	1	ID	O	0225	01033	Escort Required
OBR	43	200	CE	O		01034	Planned Patient Transport Comment
OBR	44	80	CE	O	0088	00393	Procedure Code
OBR	45	80	CE	O	0340	01036	Procedure Code Modifier

2.2.7 OBX Observation/Result Segment

OBX	7	60	ST	O		00575	References Range
OBX	8	5	ID	O	0078	00576	Abnormal Flags
OBX	9	5	NM	O		00577	Probability
OBX	10	2	ID	O	0080	00578	Nature of Abnormal Test
OBX	11	1	ID	R	0085	00579	Observe Result Status
OBX	12	26	TS	O		00580	Date Last Obs Normal Values
OBX	13	20	ST	O		00581	User Defined Access Checks
OBX	14	26	TS	O		00582	Date/Time of the Observation
OBX	15	60	CE	O		00583	Producer's ID
OBX	16	80	XCN	O		00584	Responsible Observer
OBX	17	60	CE	O		00936	Observation Method

2.2.8 MRG Merge Information

MRG	1	20	CX	R	00211	Prior Patient Identifier List
MRG	2	20	CX	O	00212	Prior Alternate Patient ID
MRG	3	20	CX	O	00213	Prior Patient Account Number
MRG	4	20	CX	R2	00214	Prior Patient ID
MRG	5	20	CX	O	01279	Prior Visit Number
MRG	6	20	CX	O	01280	Prior Alternate Visit ID
MRG	7	48	XPN	R2	01281	Prior Patient Name

3Communication Profiles

RAIMServer HL7 Service may use http communication protocol or file system, depending on configuration.

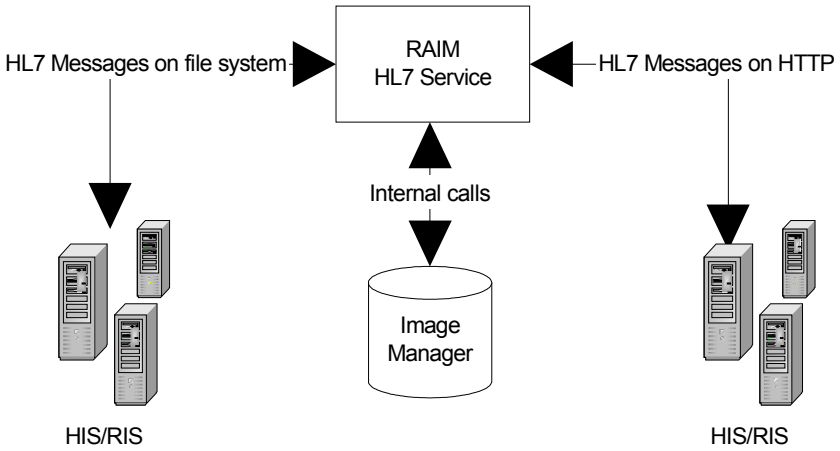

4Extended Character Set Support

RAIMServer HL7 Service supports ISO 8859-1 character set.